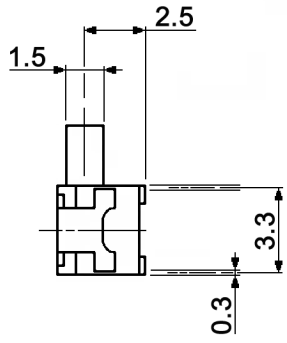

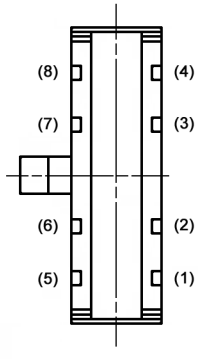

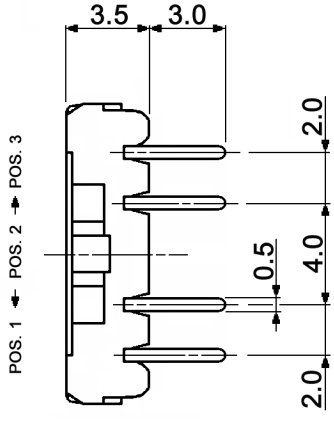

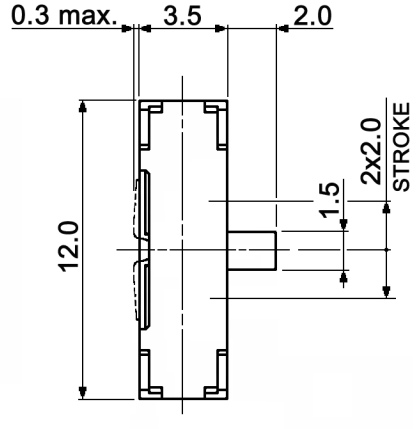

SWITCHING FUNCTION

POS. 1	POS. 2	POS. 3
ON	ON	ON
3-4 7-8	3-2 7-6	3-1 7-5

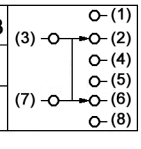

MOUNTING DIMENSIONS

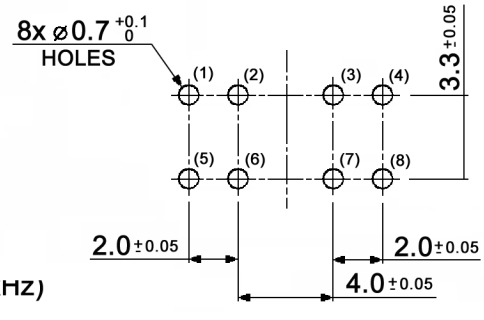

Specifications:

Contact rating:	0.2A, 12V DC
Contact resistance:	50mOhm max. at 1.5mA, 200µV AC (1kHz)
Insulation resistance:	100MOhm min. at 500V DC
Dielectric strength:	500V RMS
Operating temperature:	-20°C to +70°C
Electrical life:	5 000 cycles
Operating force:	50-400gf
Soldering conditions:	270 +/-10°C max., 3sec.
Contact timing:	non-shorting type
Material:	Frame: stainless steel
	Lever: polyamide resin (PA), natural
	Movable contact: phosphor bronze, silver plated
	Terminal: brass, silver plated
	Case: polyphenylene sulfide (PPS), black

RoHS-conform · 2002/95/EC

Tolerances: <6: ±0.2mm 6-18: ±0.4mm			Date 02/08	Name dr	MMP 231-R
			knitter-switch	30 13 76	Page
Switching function	03/12	dr			1/1
Modifications	Date	Name			